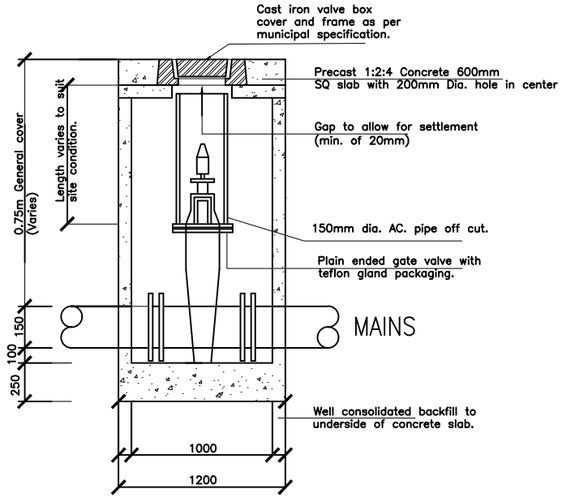


GATE VALVE INSTALLATION AND BOX
(MAINS up to 300mm)

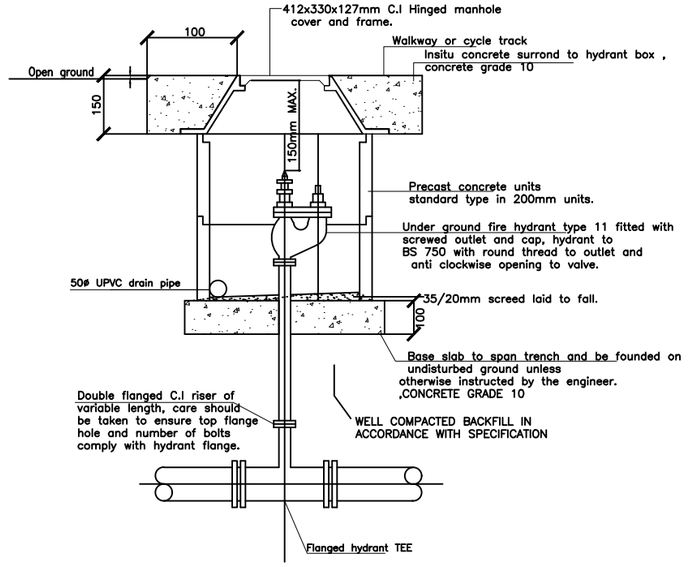


FIRE HYDRANT AND BOX DETAILS

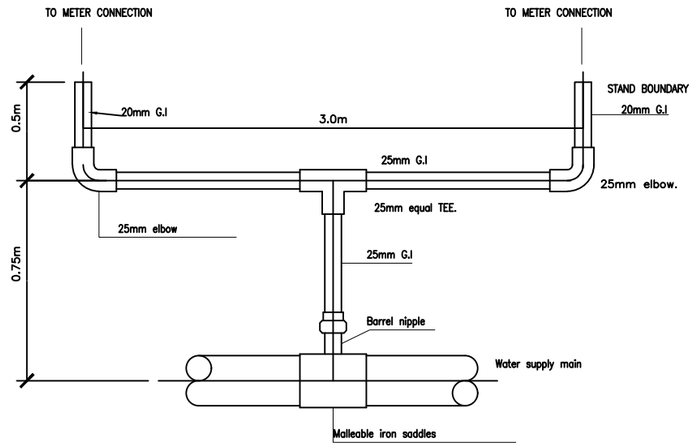


TWO WAY CONNECTION TO HOUSES

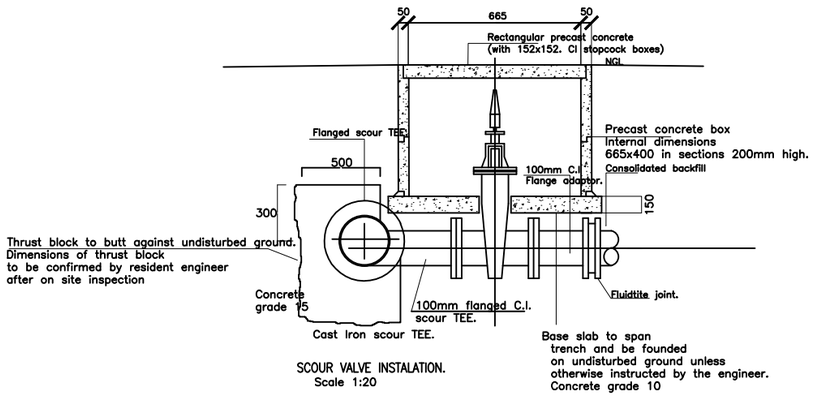


SCOUR VALVE INSTALATION.
Scale 1:20

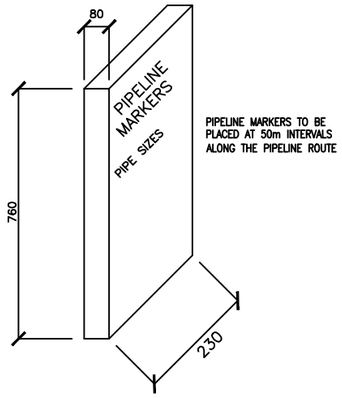


PRECAST CONCRETE PIPELINE MAKER DETAILS

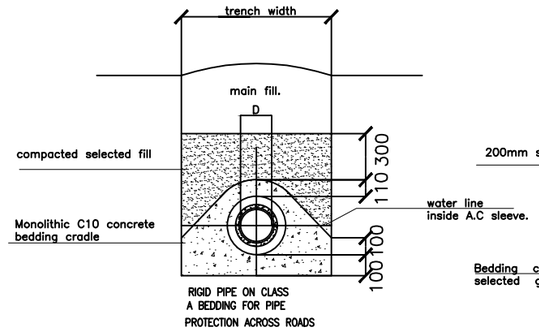


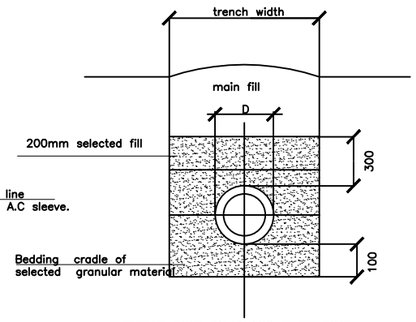


FLEXIBLE PIPE ON CLASS E BEDDING

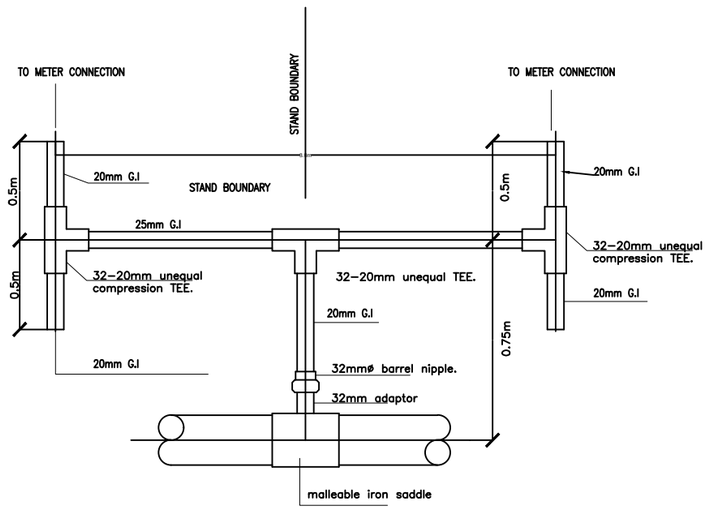


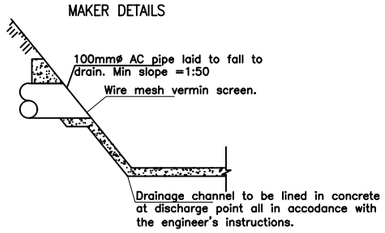


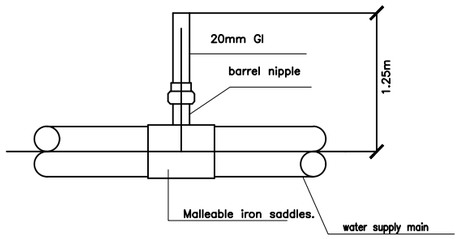


ONE WAY STAND CONNECTION

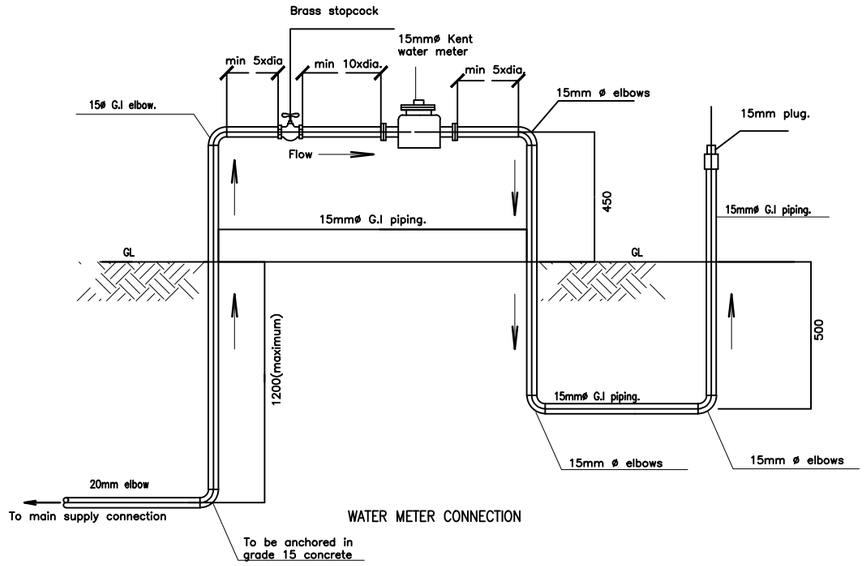


WATER METER CONNECTION

| | | | | | |
|---|---|---|---|---|---|
| Notes | AMENDMENT Lttr / date / Init | MINISTRY OF LOCAL GOVERNMENT AND PUBLIC WORKS P.O. BOX CY441 , CAUSEWAY ZIMBABWE | Branch Head : E. N | A/Director : E. N | Ministry : MOHCC |
| | | | Designed : D.T | Scale : NTS | Title : WATER AUGMENTATION FOR MICROBIOLOGY LABORATORIES |
| | | | Drawn : D.T | Date : FEBRUARY 2023 | Description : WATER STANDARD DETAILS 2 PARIRENYATWA HOSP |
| | | | Checked : L.M | File Ref | Details : |
| | Micro-film Drwg No | | Telephone 790137 / 704079 | | Stock Drwg No |

Centre : PARIRENYATWA GENERAL HOSP

G.P. No

Project No